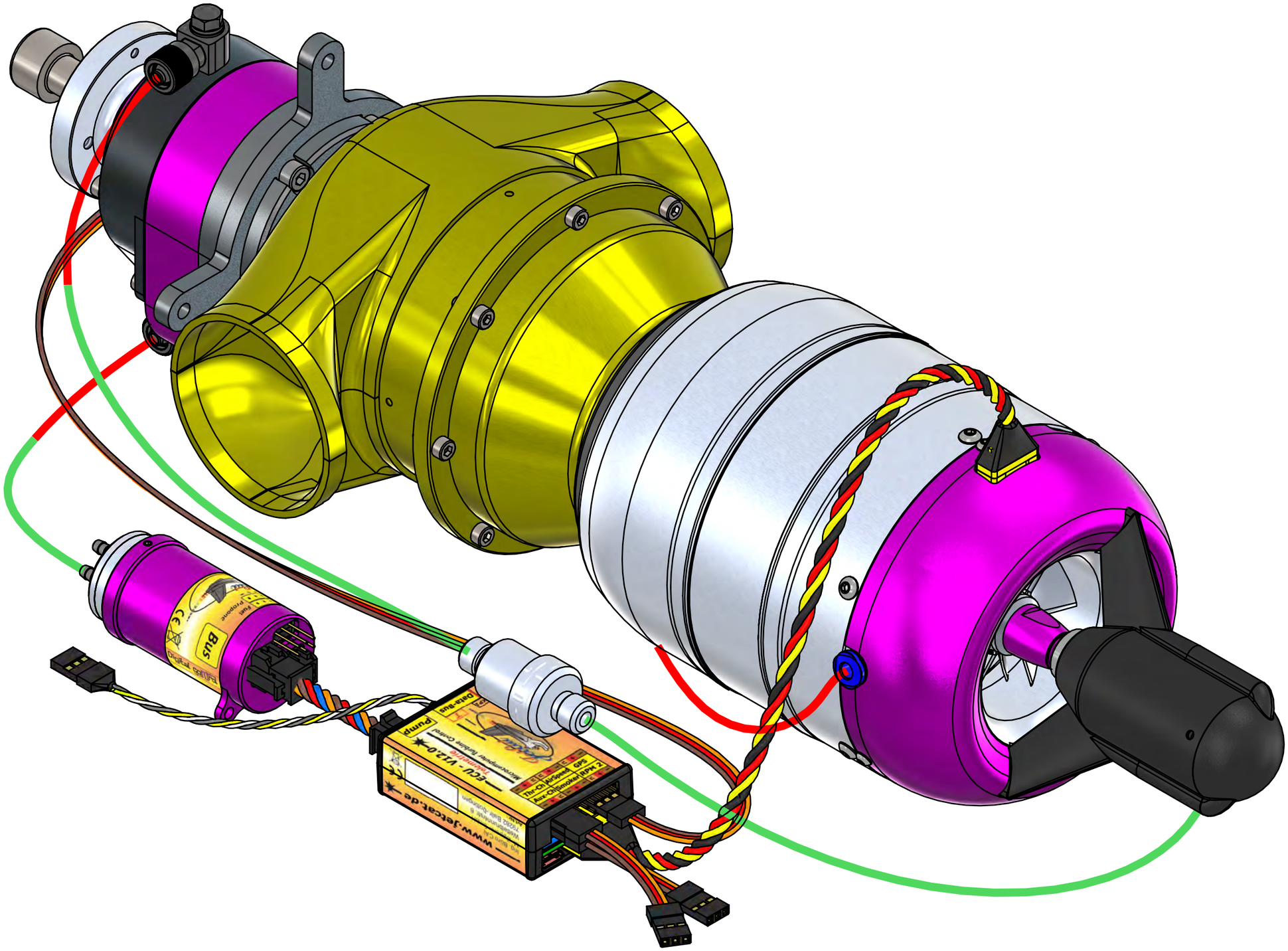
Bus
Pump
Data-Bus
ECU - V12.0
Thr-Ch
AirSpeed
GPS
Aux-Ch
Smoker
RPM 2
www.jetcat.de

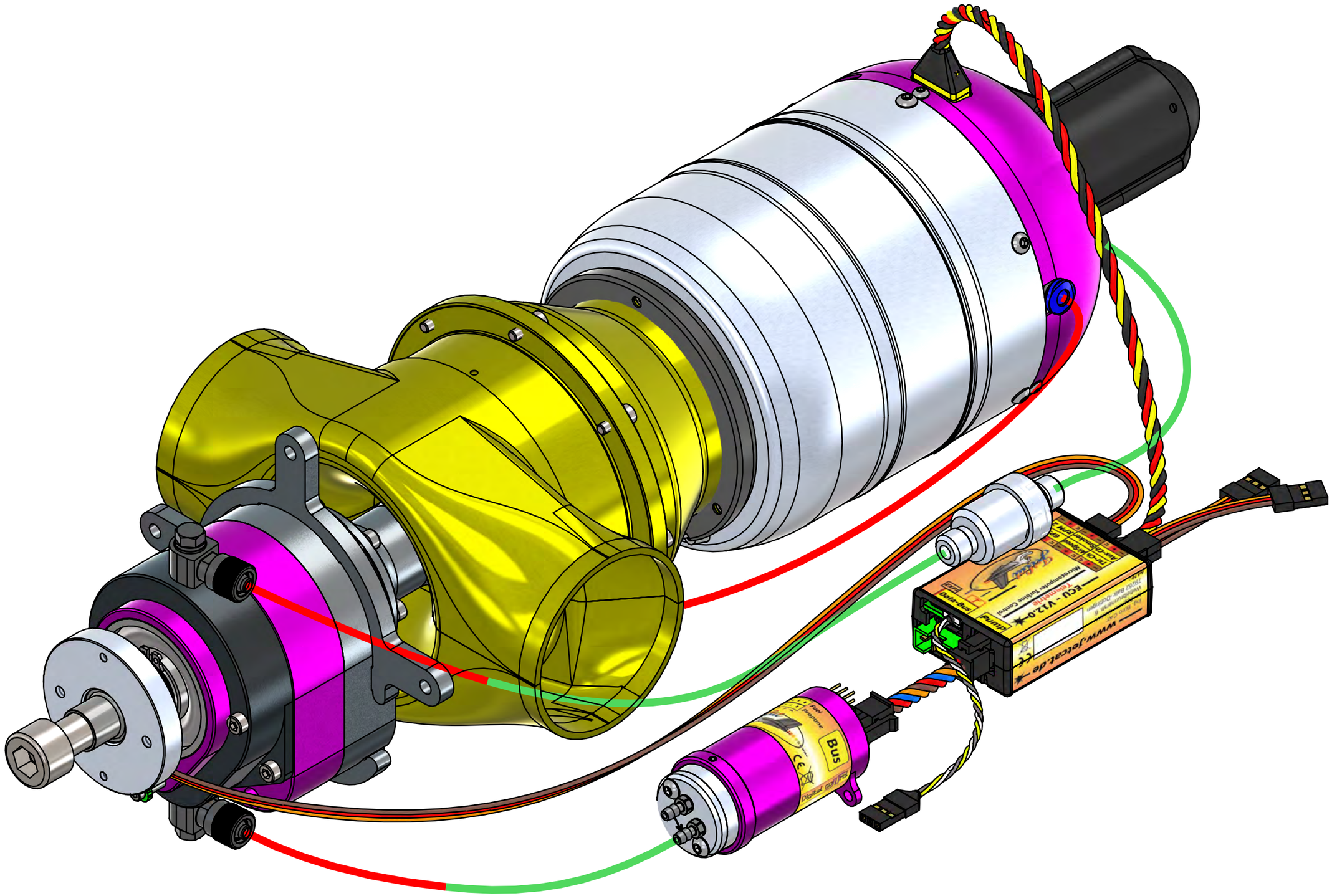
www.jetcat.de
ECU - V12.0
Bus

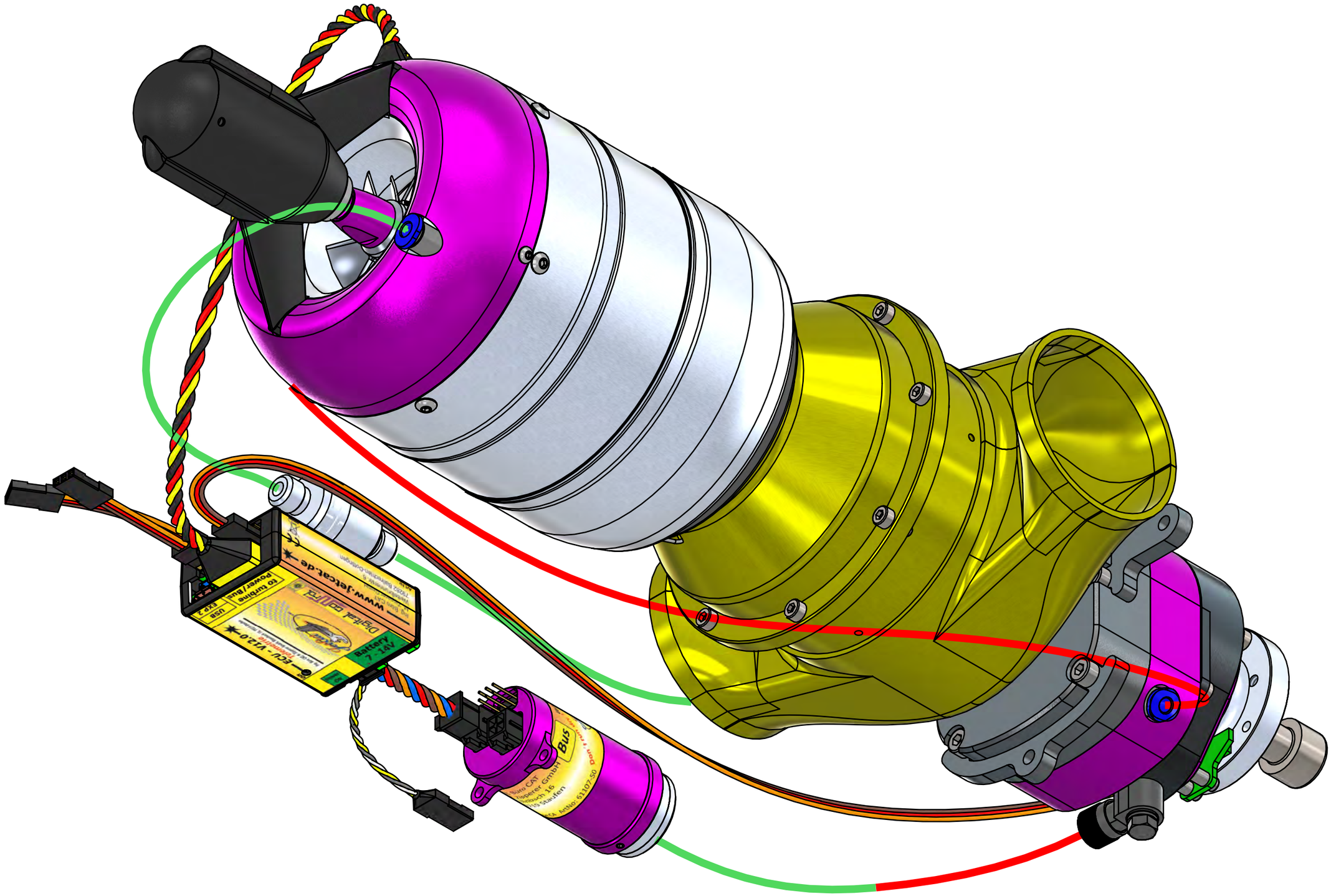

www.jetcat.de
Digital control
Battery
7 - 14V
Bus