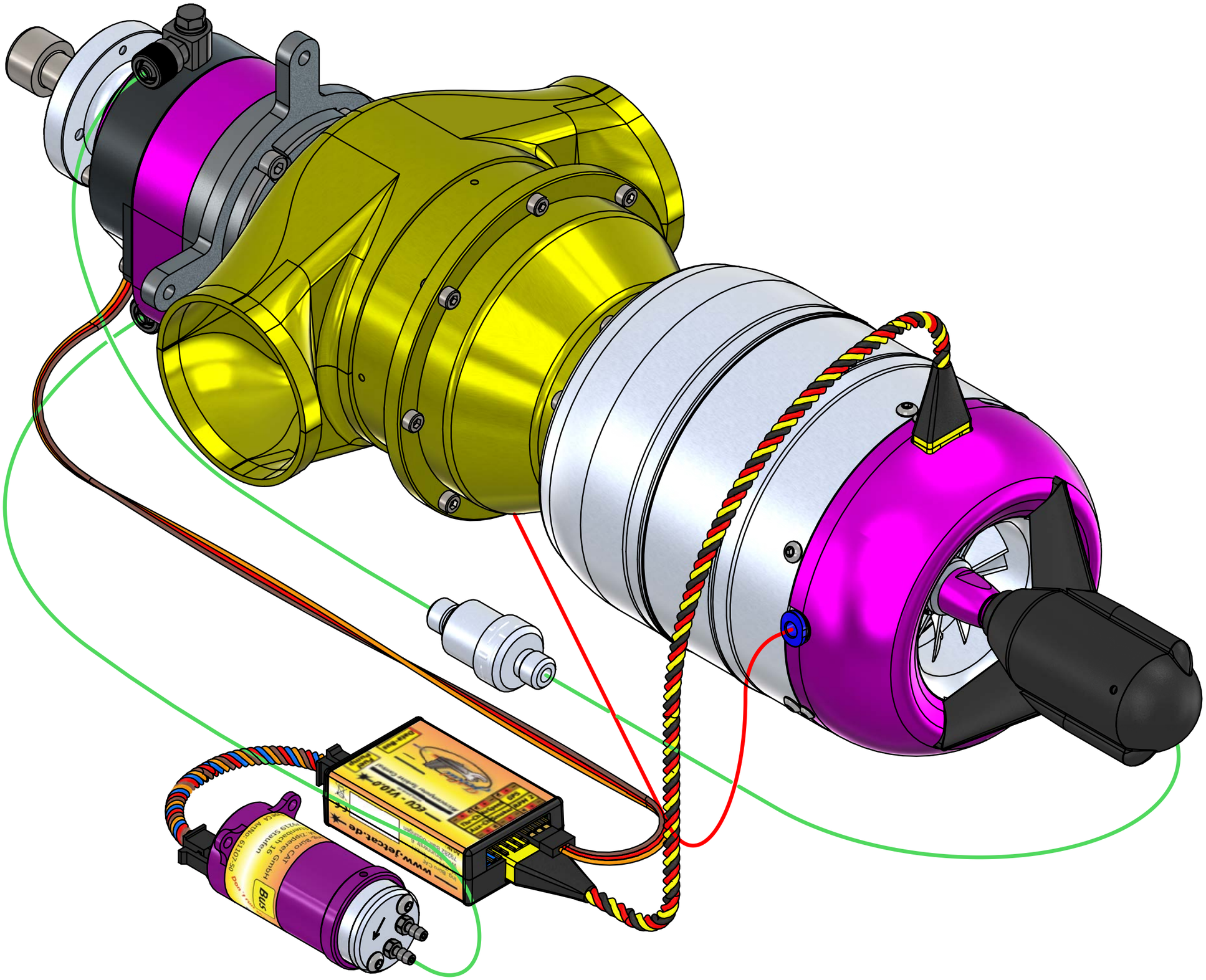
www.jetcat.de
ECU - V10.0
Bus

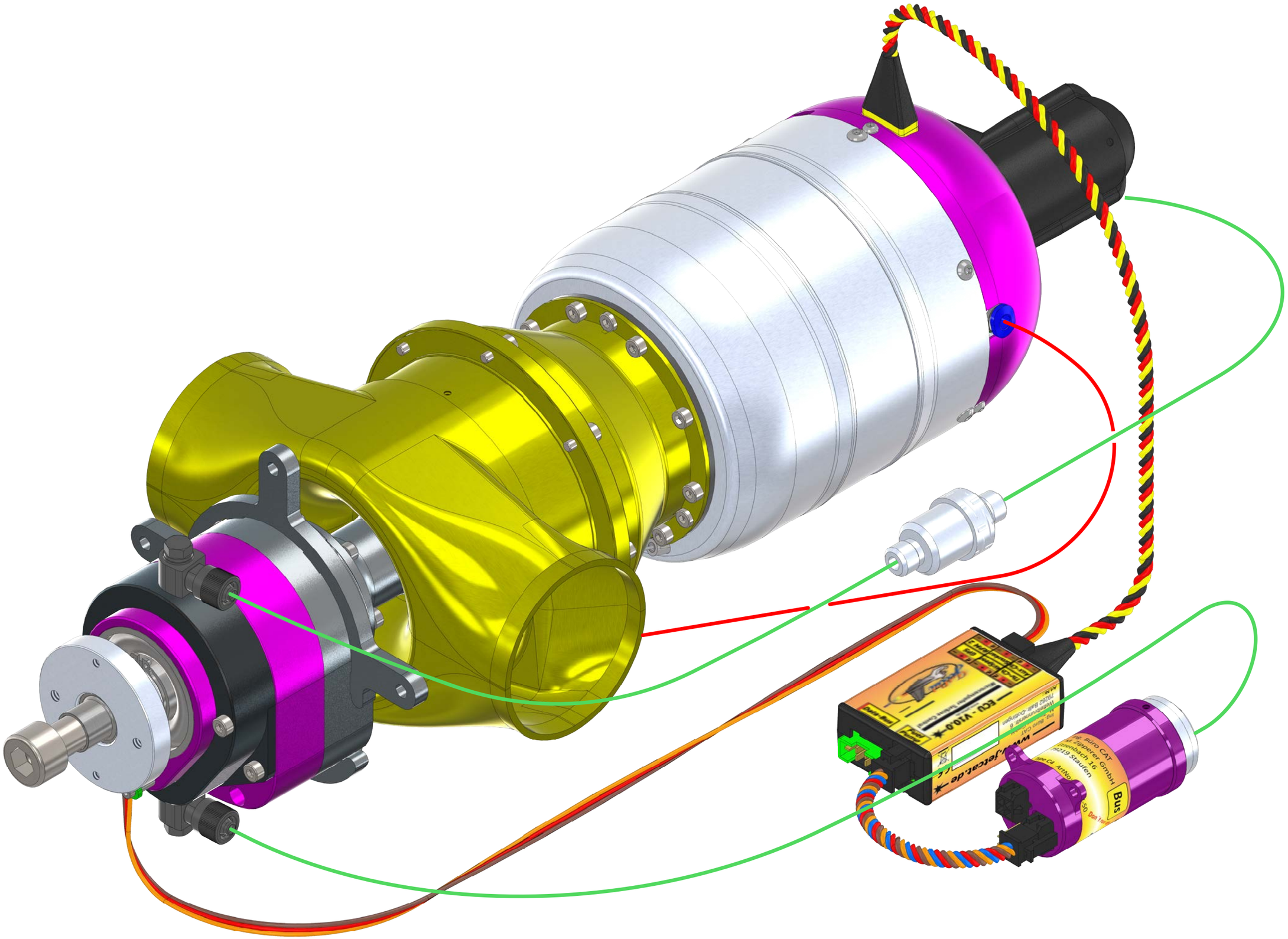
ECU - V10.0
www.jetcat.de
Bus

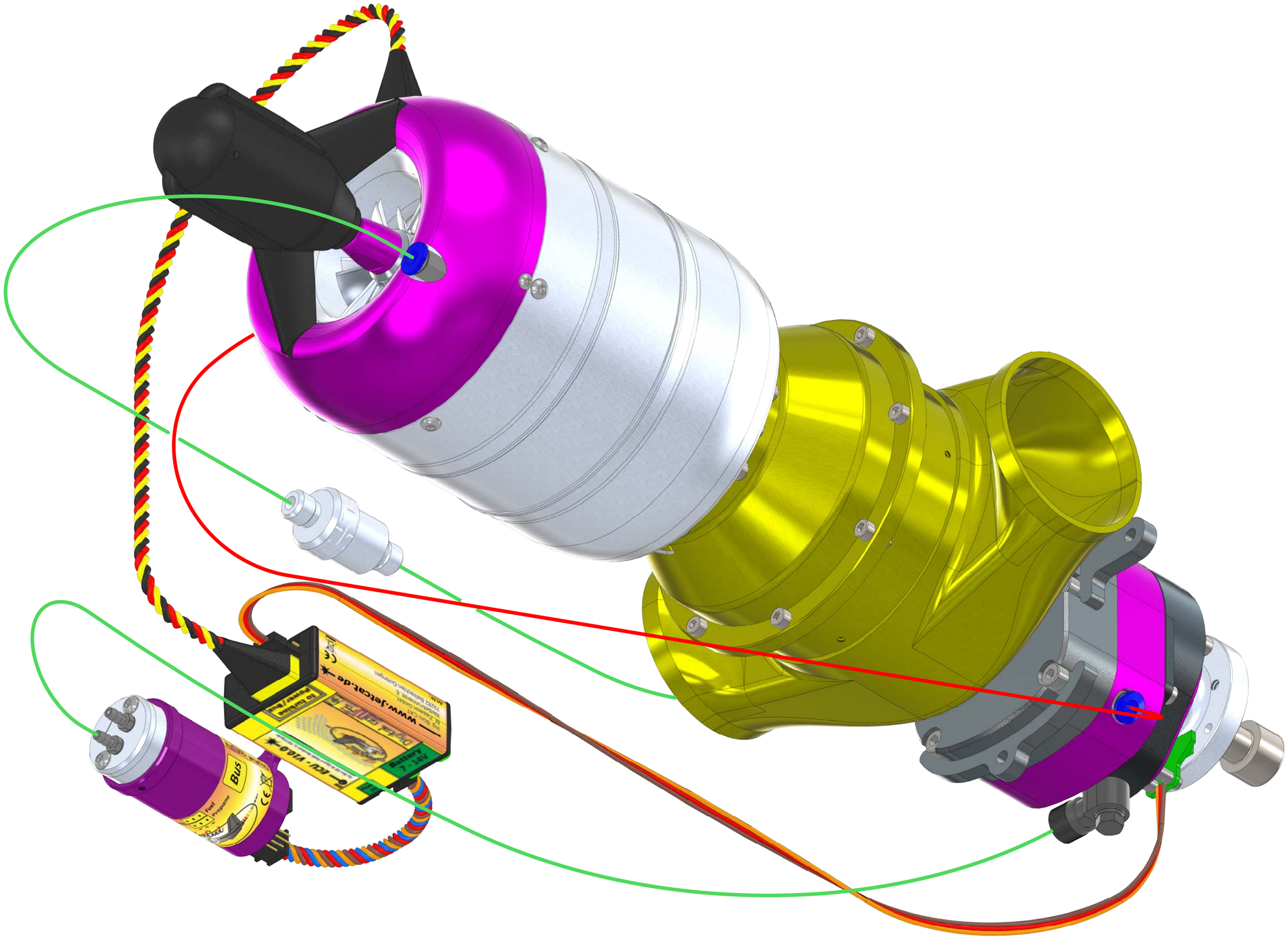
www.jetcat.de
Battery
7 - 14V
Bus
Fuel
Propane