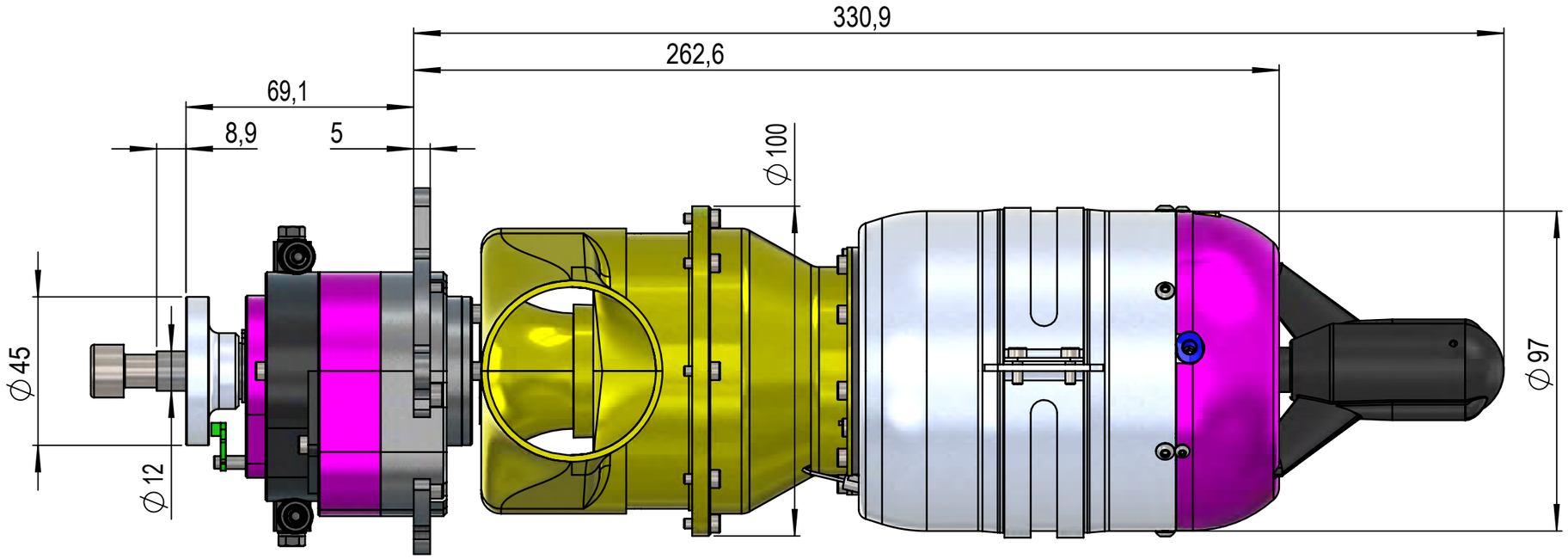

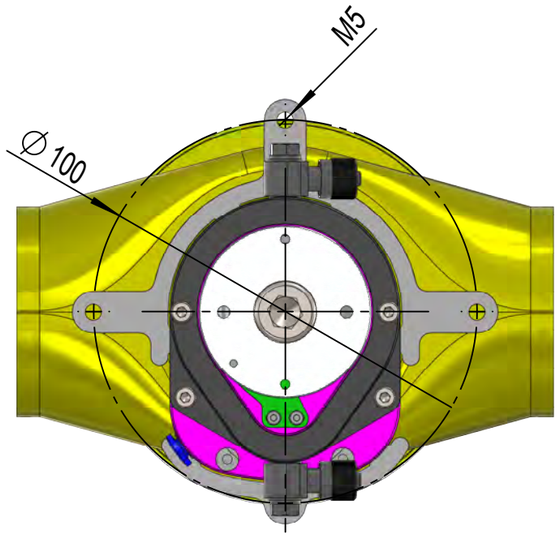

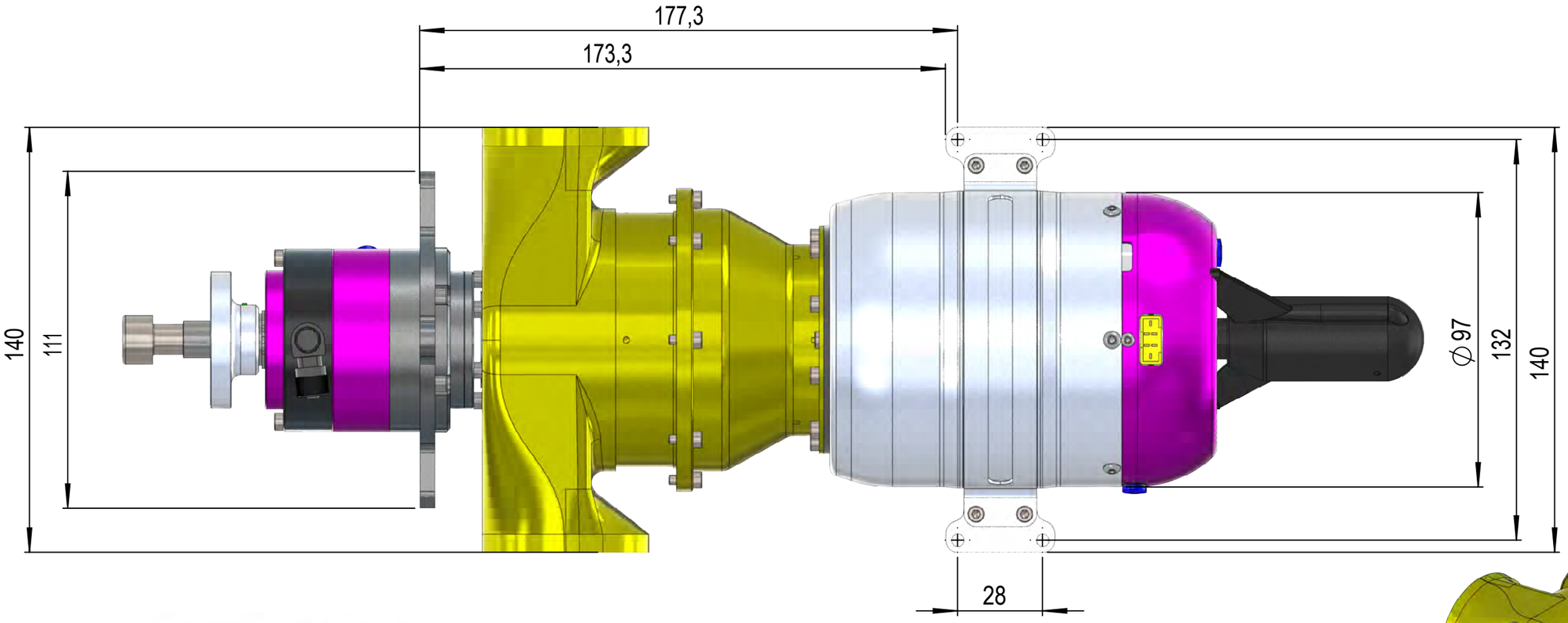

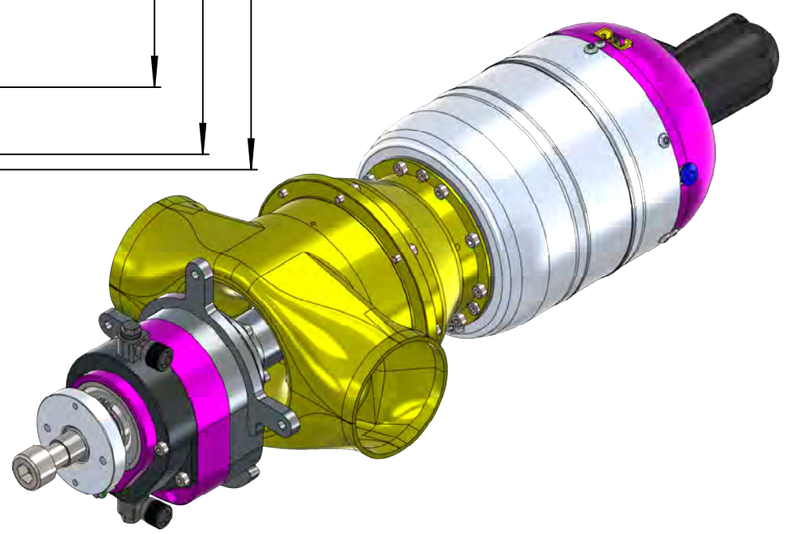

© 2017 Dimensions: SPT10-RX-H